Loan Container Incoming Inspection

KONG®-TL VBR System

Overview Instrumentation

44-090-1

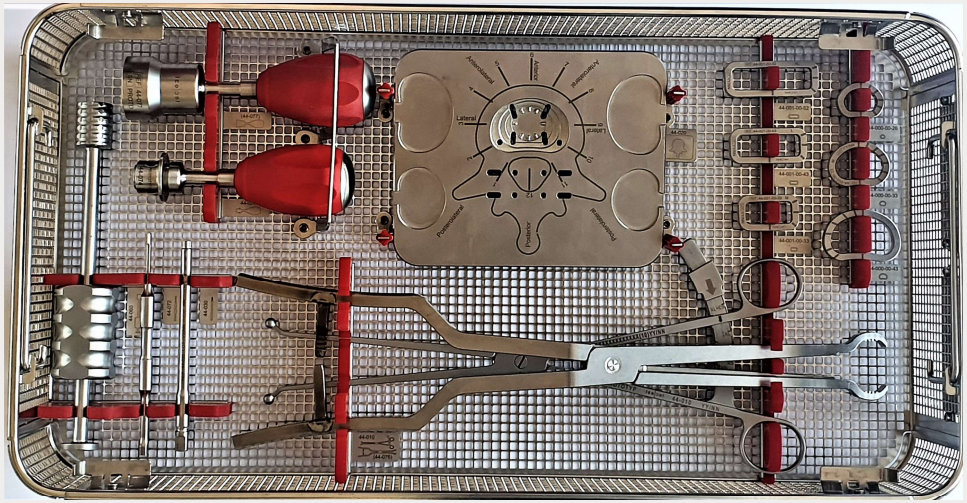

44-090-3

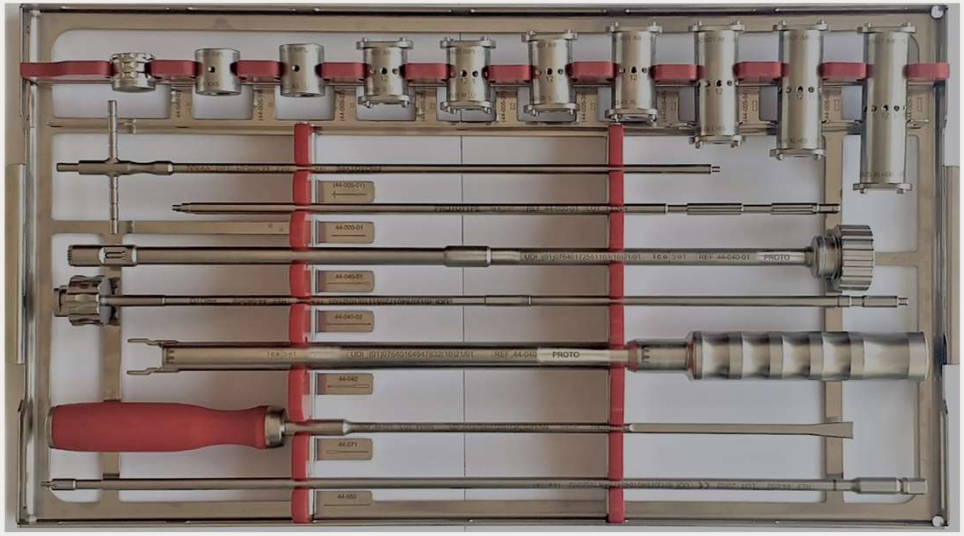

Overview Inspection Aids

- **Screw M8 (H281)**
- **Expandable Body XL Ø 19 mm (H282)**
- **Locking Screw M4 (H283)**

General Control

- **Do the contents of the container correspond to the kit profile?**
- **Are the instruments intact (not clearly damaged)?**
- **Is the laser marking legible/the data matrix code visible?**
  - Instruments where the laser marking is no longer legible must be replaced.
  - Instruments where the data matrix code (UDI) is no longer visible must be replaced. (When available, a scanner can be used to check the data matrix code.)

- **Movable parts/joints – maintenance using surgical instrument oil!**

  → **Functional inspections for instruments** (see following pages)

- **If an instrument is replaced, all tests involving this instrument have to be repeated.**
- **Instructions for Reprocessing: 0230US, 0253US**

Functional Inspection

- **Implant Height Forceps (44-010) and Drag Pointer (44-010-01)**
  - Moving parts/hinges/joints – maintenance using surgical instrument oil!
  - Lubricate the sliding surface of the forceps; after lubrication, repeatedly operate the movable parts
  - The forceps is functional in the range between “XXS” and “XL + EM”
  - Functional testing: resistance can be felt when moving the drag pointer
  - Functional testing: Check with stencil (print 100%) or with caliper that forceps is not bent; bent instruments must be replaced

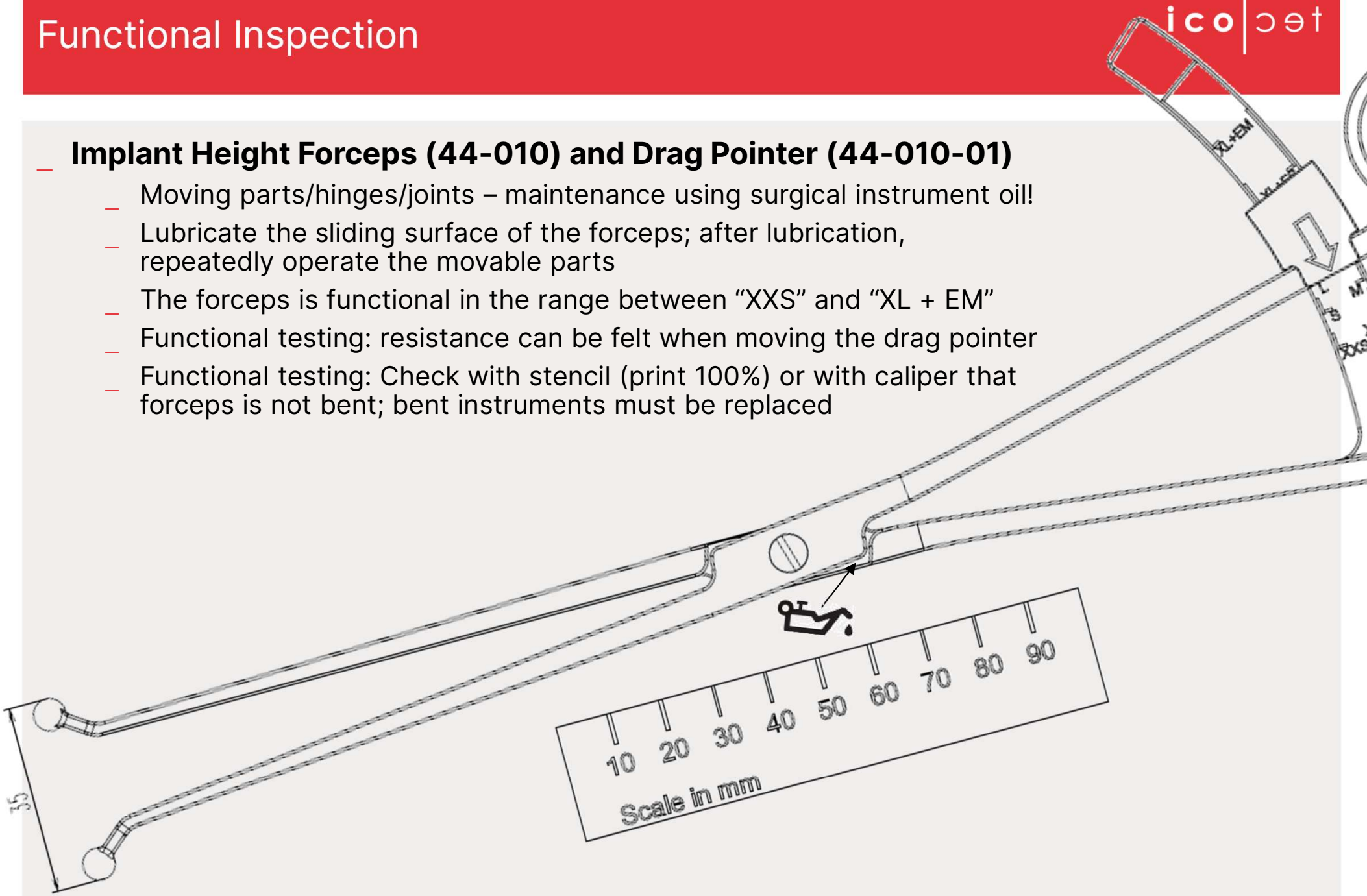

Functional Inspection

- **Trial End Plate Holder (44-000-01)**
  - Can be screwed into trial end plate, round (size S, M, L; e.g., 44-000-00-26 for size S) and trial end plate, rectangular (size M, L, XL; e.g., 44-001-00-33 for size M)

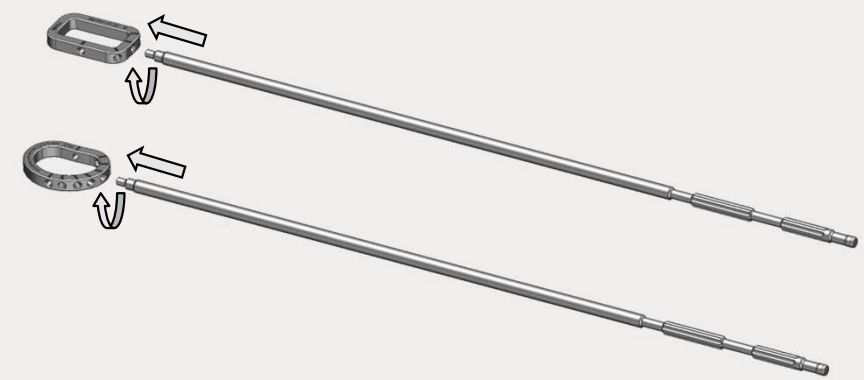

- **Trial Implant Holder (44-005-01)**
  - Can be screwed into trial implants (size XXS to XL + EM; e.g., 44-005-28 for size S); please only assemble positions 3, 6, and 9

Functional Inspection

- **Trial End Plate, round, S (44-000-00-26), M (-33), L (-43), and Trial End Plate, rectangular, M (44-001-00-33), L (-43), XL (-52)**
  - Visual inspection: threaded holes are free from residues

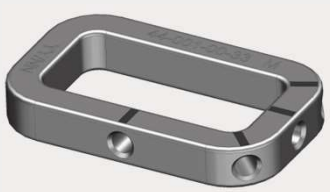

- **Trial Implant, XXS (44-005-19), XS (-22), S (-28), M (-31), L (-35), XL (-41), L + ES (-54), XL + ES (-60), XL+EM (-75)**
  - Visual inspection: through-hole and threaded holes are free from residues

Functional Inspection

- **Implant Assembly Plate (44-020)**
  - Visual inspection: through-holes are free from residues
  - Inner contour is still intact (no significant signs of wear)

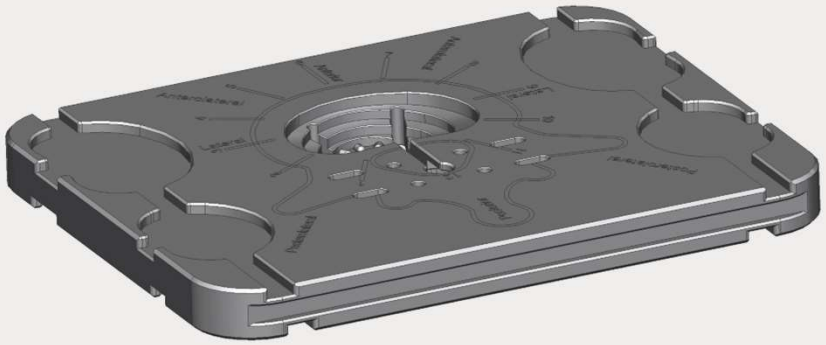

- **Extractor (44-060)**
  - Functional inspection: extractor can be connected onto the locking rod (44-040-02) and then rotated clockwise by about 90°
  - Visual inspection: sliding surface between rod and sleeve is free from residues
  - Sleeve slides smoothly over the rod with low friction

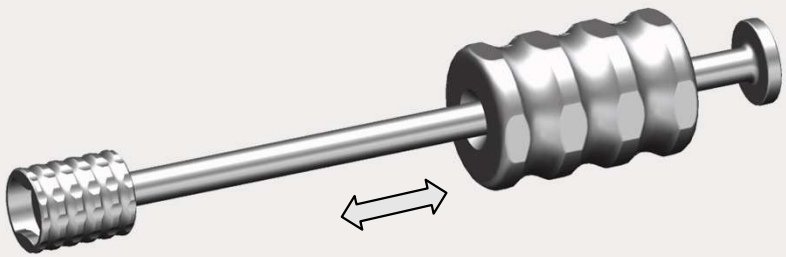

- **Bone Tamper (44-072)**
  - Check whether the tops of the instrument are intact (no significant signs of wear)

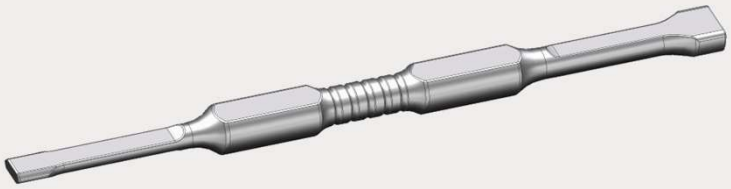

Functional Inspection

- **End Plate Screwdriver (44-030)**
  - Slotted contour is free from residues; tip with self-retaining feature is still intact (no significant signs of wear); the screw M8 (H281) can be loaded/picked up accurately and is self-retaining (shake test)
  - Functional inspection: see torque limiter with coupling (44-074)

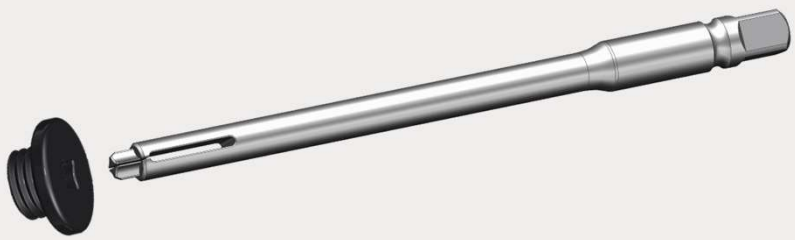

- **Torque Limiter with Coupling (44-074)**
  - Moving parts/joints – maintenance using surgical instrument oil!
  - Handles with couplings: lubricate their movable parts; repeatedly operate the coupling; if appropriate, move the sliding collars after lubrication
  - Functional inspection: connection of the ¼“ coupling to end plate screwdriver (44-030) and screwdriver for locking screw (44-050) works properly

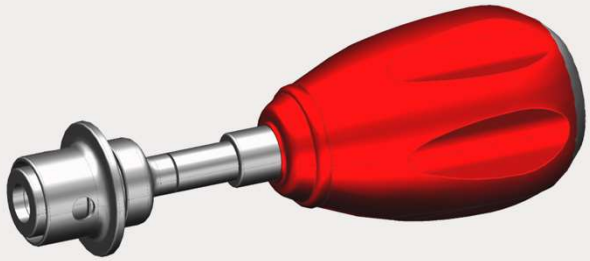

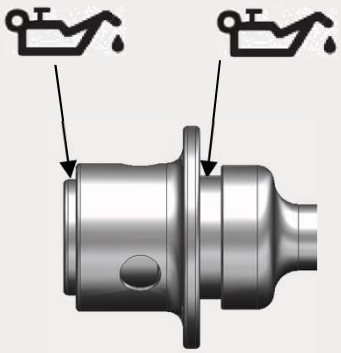

Functional Inspection

- **Expansion Handle (44-040-01)**
  - Check whether cannulation is free
  - Expansion handle can be slid into the inserter for VBR (44-040) and is secured against falling out by the snap mechanism

- **Locking Rod (44-040-02)**
  - Locking rod (44-040-02) can be slid into the expansion handle (44-040-01) and is secured against falling out by the snap mechanism
  - Visual inspection: sliding surface between rod and sleeve is free from residues

- **Inserter for VBR (44-040)**
  - Check whether cannulation is free
  - Assemble the inserter for VBR (44-040, 44-040-01, and 44-040-02) and check, whether the expandable body XL Ø 19 mm (H282) can be firmly attached, locked, and then expanded and reduced by rotating the hand wheel

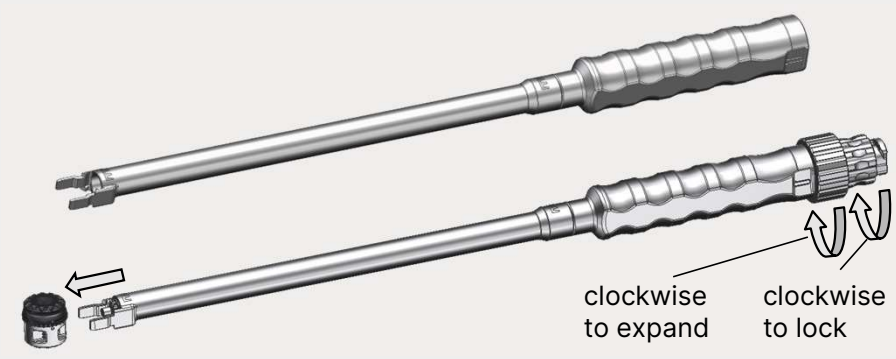

- **Adapter for Expansion Handle (44-077, optional)**
  - Functional inspection: adapter for expansion handle can be mounted on the assembled insertion instrument (44-040, 44-040-01, and 44-040-02)

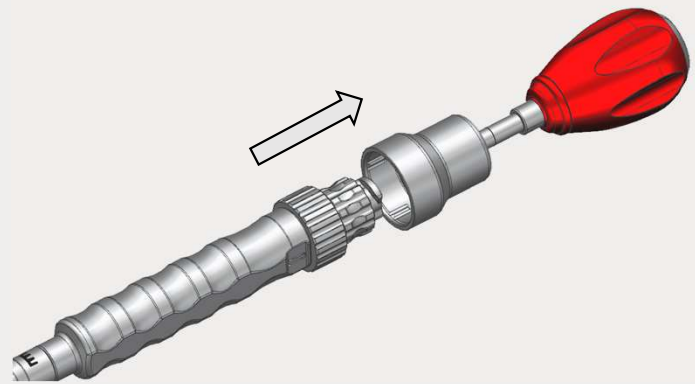

- **Impact Cap (44-040-03)**
  - Functional inspection: impact cap can be connected onto locking rod (44-040-02) and then rotated clockwise by about 90°

Functional Inspection

- **Pusher (44-071)**
  - Tip is still intact and not deformed

- **Screwdriver for Locking Screw (44-050)**
  - Visual inspection: slotted contour is free from residues
  - Hexalobular internal driving with self-retaining feature is still intact (no significant signs of wear) and fits into locking screw M4 (H283); the locking screw can be loaded/picked up accurately and is self-retaining (shake test)
  - Locking rod (44-040-02) can be slid into the expansion handle (44-040-01) and is secured against falling out by the snap mechanism
  - Functional inspection: see torque limiter with coupling (44-074)

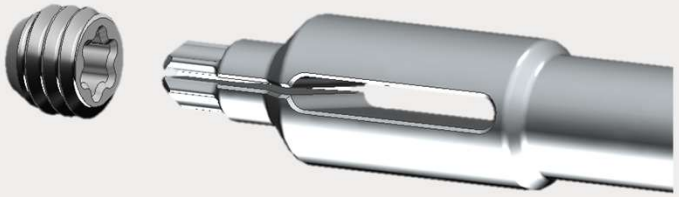

Functional Inspection

- **Revision Forceps (44-076, optional)**
  - Movable parts/hinges/joints – maintenance using surgical instrument oil!
  - Lubricate the sliding surface of the forceps; then operate the movable parts several times
  - Visual inspection: prongs are in perfect condition

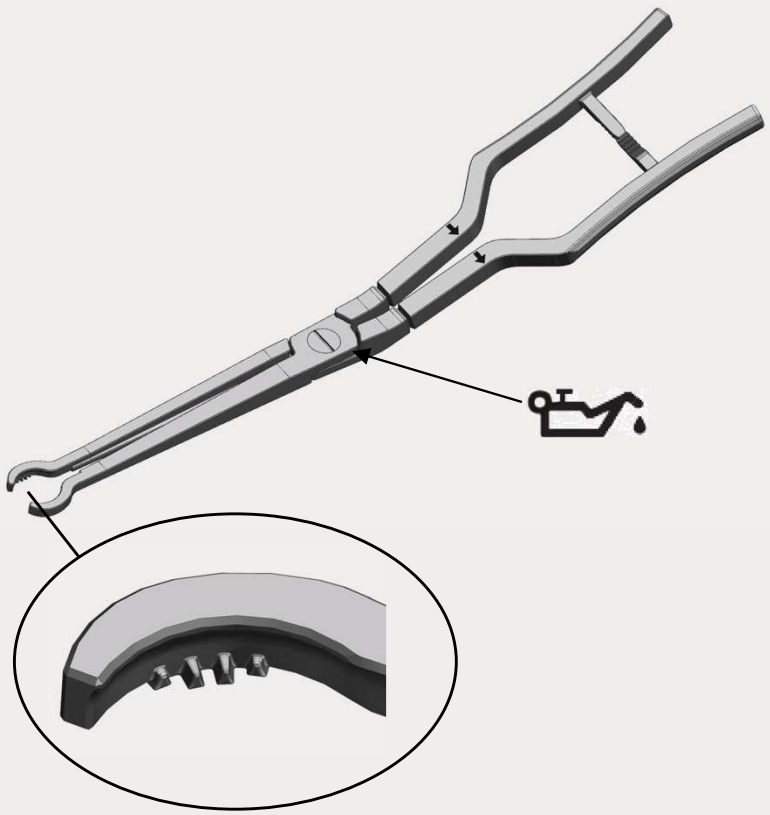

0243US.2025-04